THETFORD

USER MANUAL

Refrigerator
T2000 series

MANUAL COMPANION PAGE

Products related to this Thetford T2000 Series User Manual - Including T2095

Useful CaravansPlus links for parts, accessories, guides and support.

Shop over 8,000 caravan accessories.

Find related products, replacement parts and practical help from CaravansPlus.

- 8,000+ products
- Specialist support

Related product

Thetford T2095 Drawer Compressor Fridge - 90L - 12V

692967SP - The Thetford T2095 is a compact refrigerator designed to fit seamlessly into small spaces, making it a...more info.

View item

Helpful links

12V Fridges

Shop category

Appliances & Parts

Shop category

Towing & Car Accessories

Shop category

RV Accessories

Shop category

Awnings, Screens & Mats

Shop category

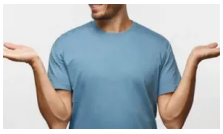

Search Products

Find parts

Guides & Articles

Helpful info

Contact Support

Ask us

Australian-owned • Caravan parts specialists • Australia-wide shipping

https://www.caravansplus.com.au

EN
Original User Manual

Contents

1 Introduction....2
2 Safety....3
3 Overview....7
4 Before use....12
5 Use....13
6 Maintenance and cleaning....20
7 Disposal....27
8 Technical specifications....28
9 Service & questions....29

1. Introduction

General

This is the user manual for your Thetford T2000 series refrigerator.

Read the safety instructions and information on use and maintenance of the refrigerator carefully before continuing. This will enable you to use the refrigerator safely and efficiently. Retain this manual for future reference.

This document is version 693098/1124-V01 of the user manual. Please visit www.thetford.com for the most recent version.

Symbols

The following symbols may be used in this manual:

Warning. Risk of serious injury and/or damage.

Caution Risk of moderate injury and/or damage.

Attention. Important information.

Note. Additional information.

Video. Additional instruction video available.

2. Safety

Please read the safety instructions carefully before using the appliance.

General

Risk of serious injury through burning, explosion, clamping, electrocution,suffocation and poisoning or damage to the product.

- Please read the safety instructions carefully before using the refrigerator.
- Use the refrigerator for cooling only and not for anything else. Follow the instructions in this manual. The manufacturer cannot be held liable for damage resulting from improper use or incorrect setting of the controls. If the instructions have not been followed, warranty claims will not be accepted.

Risk of fire and explosion with flammable refrigerant R600a.

This refrigerator is intended for use in mobile leisure vehicles.

- The refrigerator is suitable for camping use.

Children and vulnerable people

This refrigerator may be used by children aged 8 years or older and persons with reduced physical, sensory or mental capabilities and/or lack of experience and knowledge only if they are supervised or have been given instructions on the safe use of this refrigerator and understand the potential hazards.

- Keep children younger than 8 years away from the refrigerator, except under constant supervision.
- Do not allow children to play with the refrigerator. Children can become trapped and possibly suffocate.
- Do not allow children to clean or maintain this equipment unattended.
- Children aged from 3 to 8 years are allowed to load and unload refrigerating appliances.

Use of the product

Risk of health issues or damage to the refrigerator.

- Use the refrigerator for cooling and keeping frozen food frozen only and not for anything else. Follow the instructions in this manual. The manufacturer cannot be held liable for damage resulting from improper use or incorrect setting of the controls. If the instructions have not been followed, warranty claims will not be accepted.
- Do not use the drawer as a step or ladder.
- Do not use electrical appliances inside the food storage compartments of the refrigerator, unless they are of the type recommended by the manufacturer.
- Never expose the refrigerator to moisture and/or rain.
- Keep ventilation openings, in the refrigerator enclosure or in the built-in structure, clear of obstruction.
- Do not store explosive substances such as aerosol cans with a flammable propellant in this refrigerator.
- Never keep carbonated liquids in the frozen food compartment.
- Never eat ice-cubes or popsicles directly out of the frozen food compartment. This can cause burns.
- As the constant regulation of temperature can not be guaranteed, the refrigerator might not be suitable for proper storage of medications. Refer to the instructions included with the medications.

General use.

- Opening the door for long periods can cause a significant increase of the temperature in the compartments of the refrigerator.
- Actual energy consumption of the refrigerator depends on the power source, ambient temperature, and the content of the cooling system.
- Store consumables in suitable containers or wrapping in the refrigerator to avoid direct contact with interior.
- Two-star frozen-food compartments are suitable for storing pre-frozen food, storing or making ice-cream and making ice cubes.
- One-, two- and three-star compartments are not suitable for the freezing of fresh food.
- To prevent your refrigerator from ice formation, always cover liquid products, let warm products cool down before placing them inside the refrigerator and do not open the door any longer than necessary.

Maintenance and cleaning

Risk of serious injury through and electrocution or damage to the refrigerator.

- Before carrying out any kind of maintenance or cleaning on the refrigerator, switch it off, disconnect the AC and DC power source.
- Do not use mechanical devices or other means to accelerate the defrosting process, other than those recommended by the manufacturer.
- Do not use abrasive cleaners, metal scouring pads or hard brushes. They could damage the cooling system.
- Never clean the refrigerator with soap or aggressive, caustic or soda-based cleaning agents.
- Do not expose the refrigerator to water.
- The loose parts of the refrigerator are not suitable for the dishwasher.
- Build-up of dust on the condenser will reduce the performance of the refrigerator and increase the risk of overheating of the cooling system. Have the condenser and cooling fan cleaned by qualified service personnel if you suspect poor performance.

Servicing and troubleshooting

Risk of serious injury through burns, explosion, suffocation,electrocution, fire and poisoning or damage to the refrigerator.

Never open or damage the refrigerant circuit of the cooling system at the back or on the inside of your refrigerator. The cooling system is pressurised and contains flammable substances.

- Never open or damage the refrigerant circuit of the cooling system at the back or on the inside of the appliance. The cooling system is pressurised and contains substances that can be harmful to your health.
- All servicing must be carried out by an approved competent person.
- Make sure that installation, electrical connection and maintenance of the gas system will be done by a qualified technical person, according to the national legislation in force.
- Use only parts supplied by the manufacturer.
- Do not change or adjust anything on the refrigerator, unless the change is authorised by the manufacturer or its representative.
- Thetford recommends an annual inspection service by an approved service centre.

Electricity

Risk of serious injury through electrocution, burns and fire or damage to the refrigerator and the surrounding.

- When positioning the refrigerator, ensure the supply cord is not trapped or damaged.
- If the supply cord is damaged, it must be replaced by the manufacturer, its service agent or similarly qualified person in order to avoid a hazard.

- Do not locate multiple portable socket-outlets or portable power supplies at the rear of the refrigerator.

Storage

Risk of damage to the refrigerator due to flooding and moisture.

- If the refrigerating refrigerator is left empty for long periods, switch off, defrost, clean, dry, and leave the door open to prevent mould developing within the refrigerator.

Environmental

The refrigerant is R600a. Servicing and disposal of refrigerator should be done by a qualified person.

- When the vehicle is exposed to full sun light, it is strongly recommended to apply proper ventilation in the vehicle to reduce energy consumption.

3. Overview

T2095

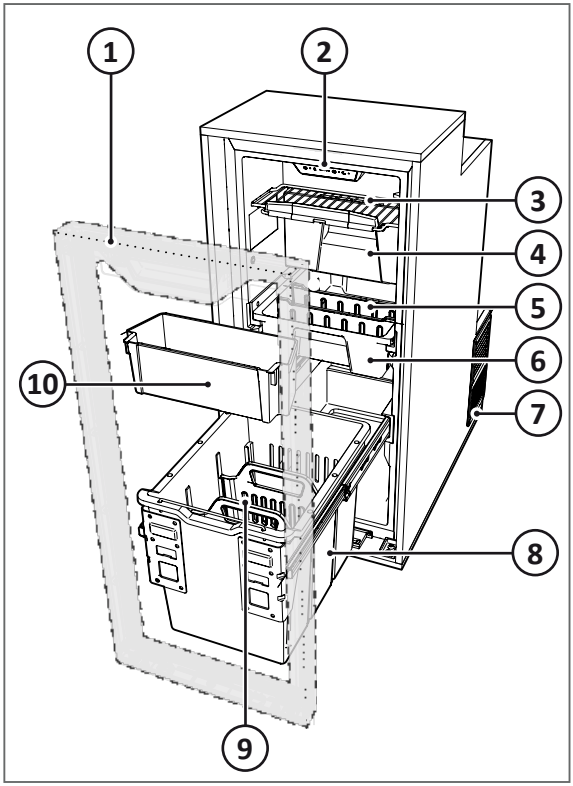

1. Refrigerator door
2. Control panel including interior light
3. Top shelf
4. Frozen food compartment door
5. Drawer divider
6. Drawer
7. Ventilation for cooling system
8. Bottle and vegetable bin
9. Drawer divider
10. Door bin

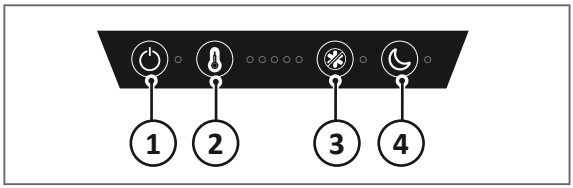

1. On/off button
2. Temperature settings - fresh food compartment
3. On/Off button - frozen food compartment
4. Night mode button

T2120

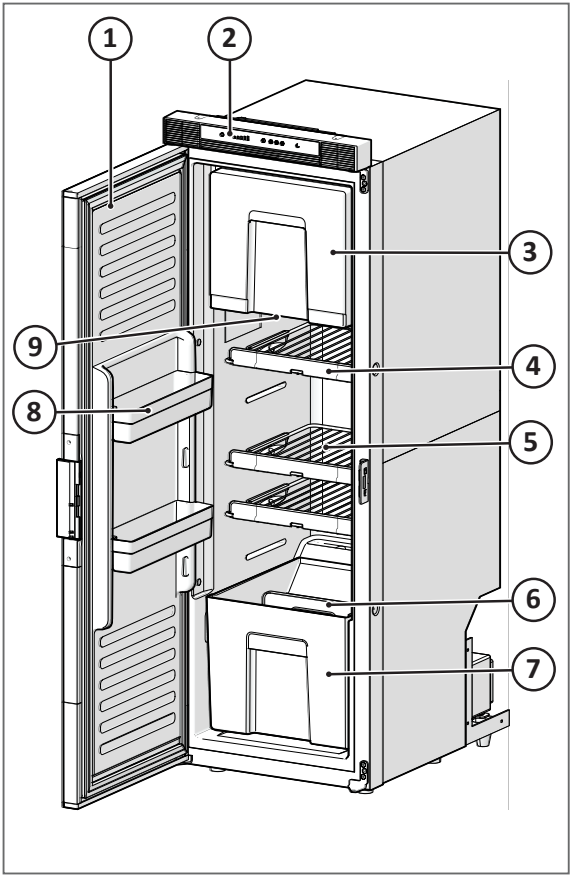

1. Refrigerator door
2. Control panel
3. Frozen food compartment door
4. Shelf food retainer
5. Storage shelves
6. Drawer divider
7. Bottle and vegetable bin
8. Door bins
9. Interior light

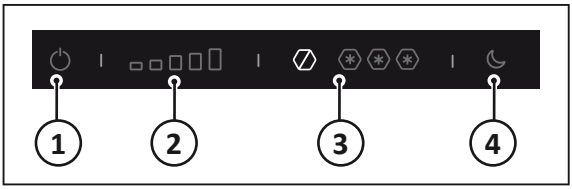

1. On/off button
2. Temperature settings - fresh food compartment
3. Temperature settings - frozen food compartment
4. Night mode button

T2138

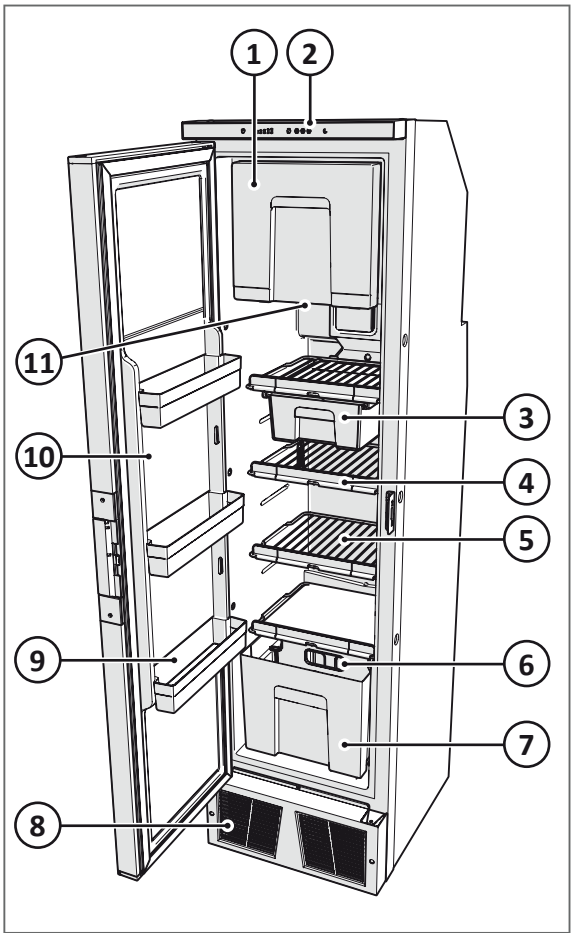

1. Frozen food compartment door
2. Control panel
3. Slide-out box
4. Shelf food retainer
5. Storage shelves
6. Drawer divider
7. Bottle and vegetable bin
8. Ventilation for cooling system
9. Door bins
10. Refrigerator door
11. Interior light

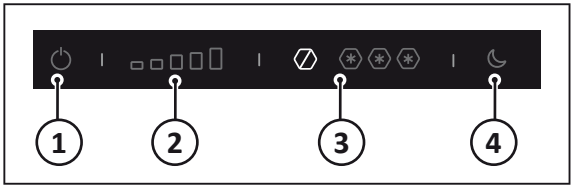

1. On/off button
2. Temperature settings - fresh food compartment
3. Temperature settings - frozen food compartment
4. Night mode button

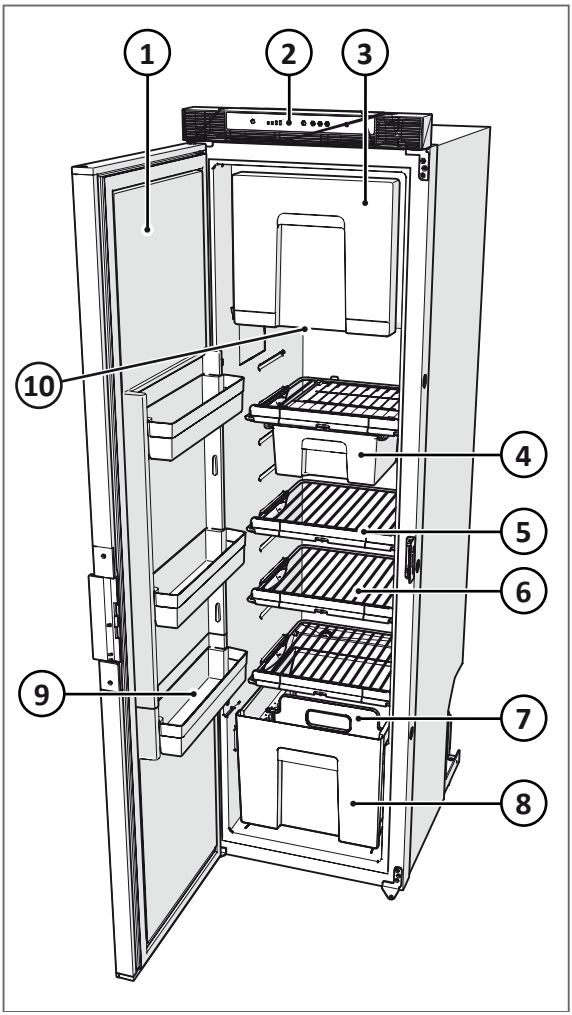

1. Refrigerator door
2. Control panel
3. Frozen food compartment door
4. Slide-out box
5. Shelf food retainer
6. Storage shelves
7. Drawer divider
8. Bottle and vegetable bin
9. Door bins
10. Interior light

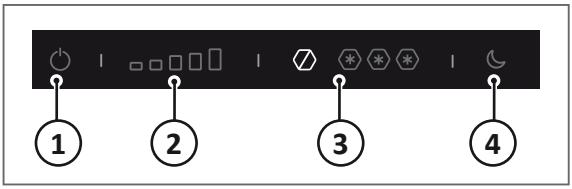

1. On/off button
2. Temperature settings - fresh food compartment
3. Temperature settings - frozen food compartment
4. Night mode button

T2156

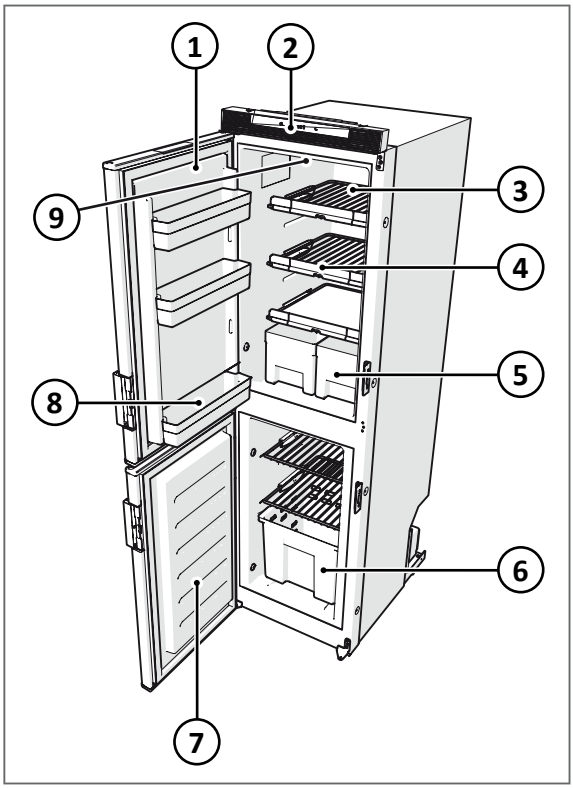

1. Fresh food compartment door
2. Control panel
3. Storage shelves
4. Shelf food retainer
5. Vegetable bins
6. Drawer
7. Frozen food compartment door
8. Door bins
9. Interior light

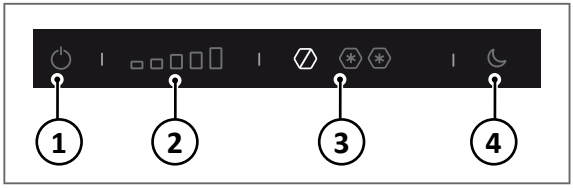

1. On/off button
2. Temperature settings - fresh food compartment
3. Temperature settings - frozen food compartment
4. Night mode button

T2160 / T2175 / T2208

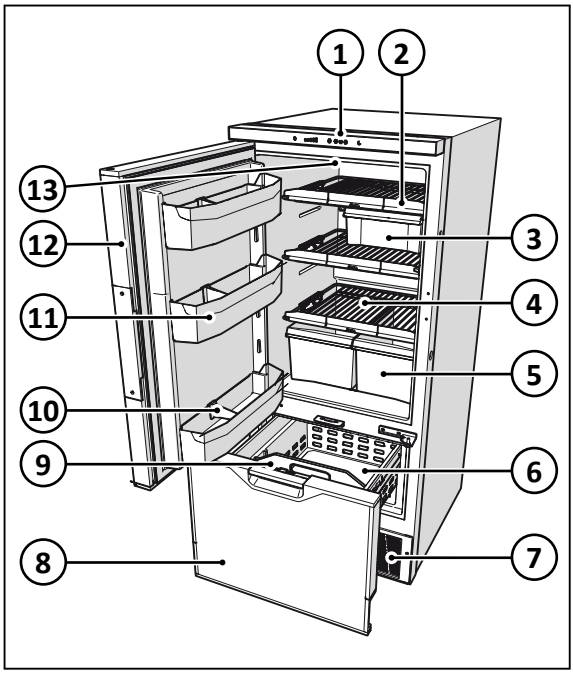

1. Control panel
2. Shelf food retainer
3. Slide-out box
4. Storage shelves (amount may vary depending on model)
5. Vegetable bin
6. Frozen food compartment
7. Ventilation for cooling system (including filter)
8. Frozen food compartment door
9. Drawer divider
10. Bottle retainer
11. Door bins
12. Refrigerator door
13. Interior light

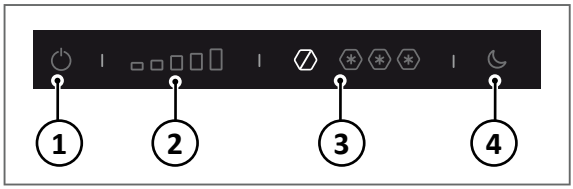

1. On/off button
2. Temperature settings - fresh food compartment
3. Temperature settings - frozen food compartment
4. Night mode button

4. Before use

Read the applicable instructions in chapter *Safety* first.

Before using the appliance:

- Ensure that all packaging materials have been removed.
- Clean the appliance with warm water and household detergent and dry carefully with a soft cloth.
- Ensure that the DC electricity supply is connected and turned on.

5. Use

Read the applicable instructions in chapter *Safety* first.

Switching on

To switch on the refrigerator:

T2095

- Push the on/off button and hold it until the indicator lights up.

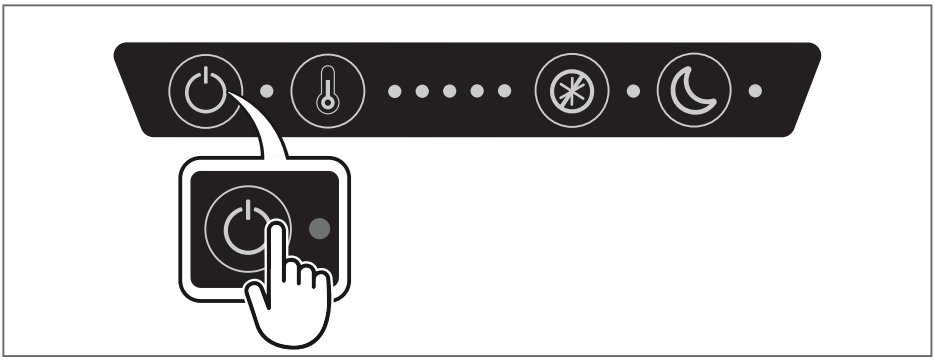

After a few seconds the control panel will change to stand-by and locked mode. The blue on/off indicator light stays lit, indicating the refrigerator is still in function.

All other models

- Press on/off icon and hold until it lights up.

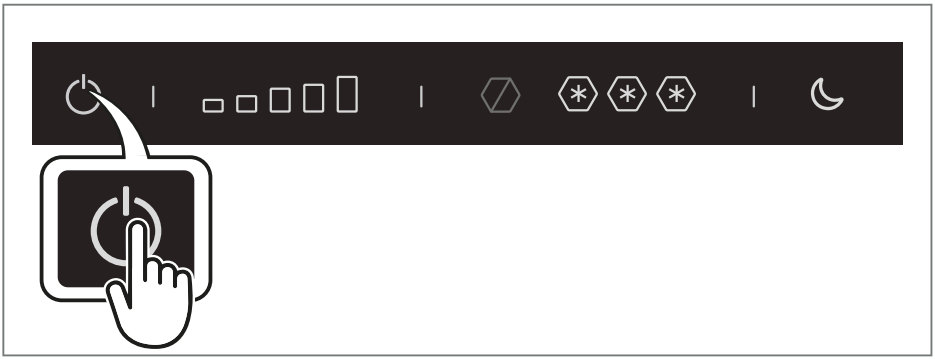

After a few seconds the control panel will change to stand-by and locked mode. The blue on/off icon light stays lit, indicating the refrigerator is still in function.

For optimal performance, switch on the refrigerator 4 hours before placing food inside the refrigerator.

- To switch off the refrigerator, push and hold the on/off button for a few seconds.

Selecting cooling level fresh food compartment

Select one of five levels to set the desired level of cooling of the fresh food compartment.

To select the desired cooling level:

T2095

- Unlock the control panel: press one of the buttons. The T2095 control panel automatically unlocks when opening the door.
- Press the temperature button several times until the desired level is reached.

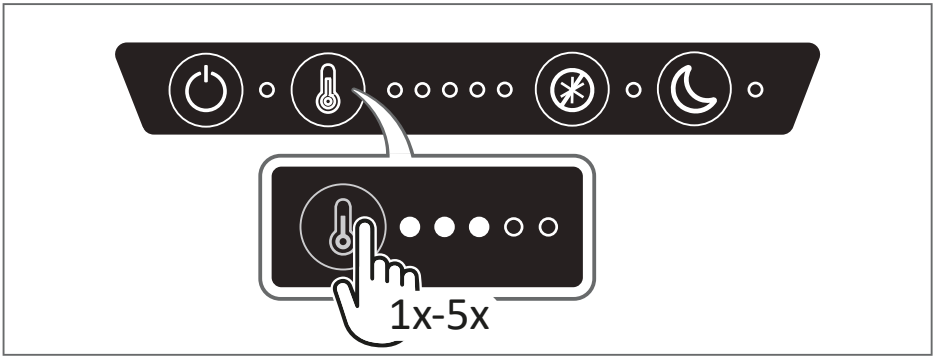

All other models

- Unlock the control panel: press one of the buttons.
- Press the fresh food area and hold it for a few seconds until the temperature icons start blinking.
- Slide or press the temperature icons to select the desired level.

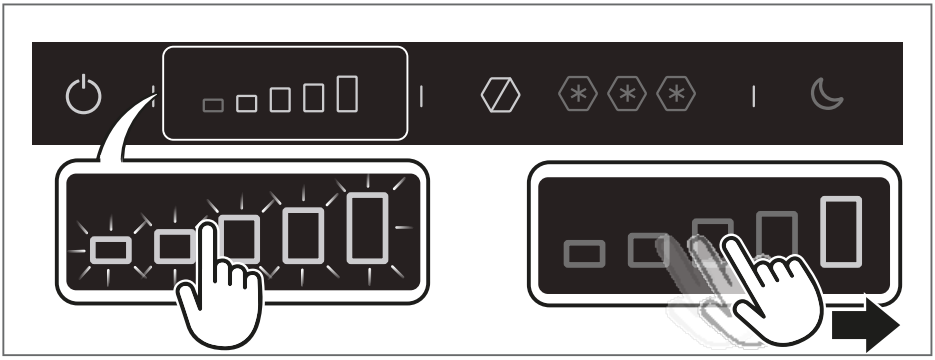

After a few seconds, the control panel will save the settings and go to the locked stand-by mode.

When the display is locked, the icons will turn off, only on/off and night mode will stay illuminated.

Selecting cooling level frozen food compartment

Depending on the model the frozen food compartment has up to three cooling levels.

Always look at the packaging instructions of your food products for preservation level.

- Thetford advises to set the frozen food compartment on the highest setting. A lower setting is only needed to reduce the energy consumption.
- The T2095 has only Medium temperature setting.
- The T2156 has only Low and Medium temperature setting.

Off:			Temperature in the frozen food compartment is kept below 20°C. In this setting the energy consumption in very low, to maximizing off-grid time. To activate: press and hold for a few seconds.
Low:			Temperature in the frozen food compartment is around -6°C. This setting is suited for making ice cubes and keeping products frozen for a short period of time. This setting saves energy compared to the higher settings.

Medium:			Temperature in the frozen food compartment is around -12°C. This setting is suited for keeping products frozen for an average period of time. This setting uses an average amount of energy.
High:			Temperature in the frozen food compartment is around -18°C. This setting is suited for keeping products frozen for a long period of time. Also this setting is advised when storing ice cream products. This setting uses the most amount of energy.

To select the desired cooling level:

T2095

- Unlock the control panel: the control panel automatically unlocks when opening the door.
- Press the on/off button to turn cooling of the frozen food compartment on or off.

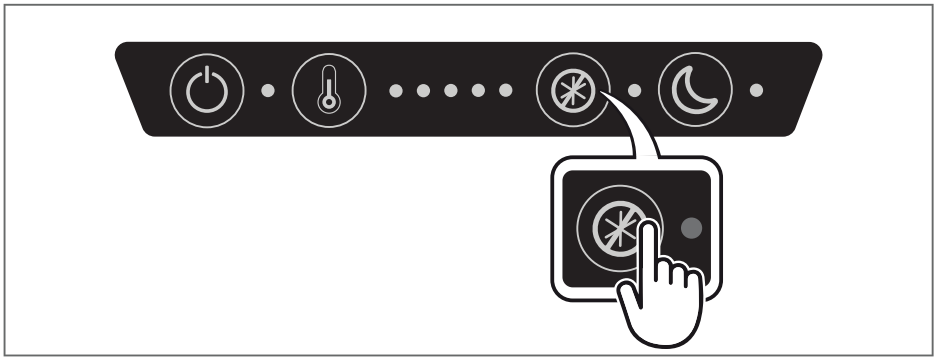

All other models

- Unlock the control panel: press one of the buttons.
- Press the frozen food area and hold it for a few seconds until the icons start blinking.
- Slide or press the temperature icons to select the desired level.

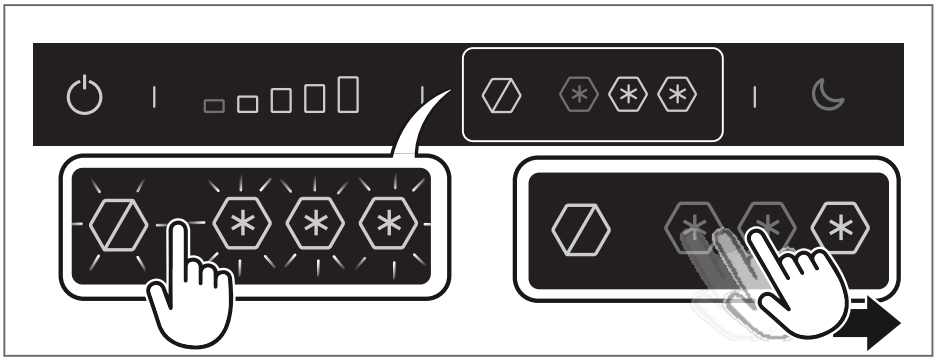

After a few seconds, the control panel will save the settings and go to the locked stand-by mode.

When the display is locked, the icons will turn off, only on/off and night mode will stay illuminated.

Selecting night mode

The refrigerator will select the lowest noise setting where possible. When the refrigerator needs to run harder (due to higher ambient temperatures and/or warm products), it may result in an increase of noise. You can switch on the night mode, to reduce the noise to a minimum. The cooling down time might take longer. The blue light indicates the night mode is activated.

T2095

- Press one of the buttons to unlock the control panel (T2095 panel unlocks automatically on opening the door).
- Push the night mode button until the indicator lights up.

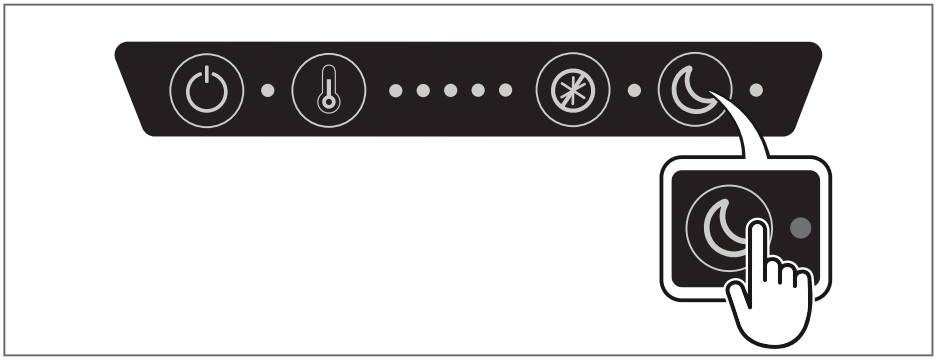

All other models

- Press one of the buttons to unlock the control panel.
- Push the night mode icon until it lights up.

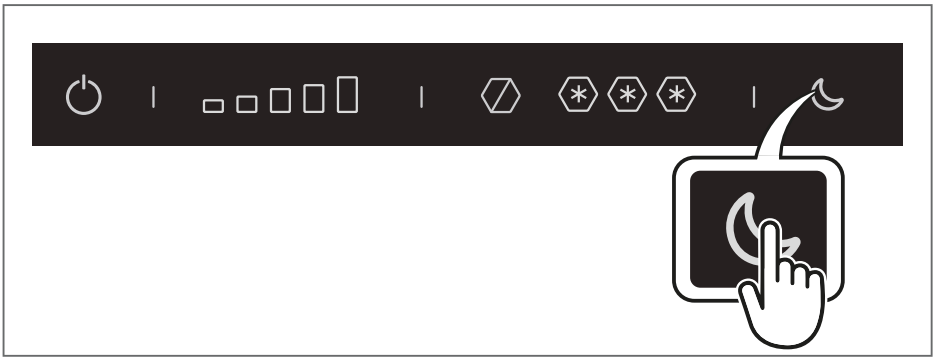

Use night mode only when temperatures in the vehicle are below 30ºC. The night mode will switch off automatically after 12 hours. When switching off the night mode manually, it will go to automatic temperature control.

Switch off/on blue indication light (T2095 only)

Model T2095 is equipped with an exterior light behind the vent to indicate the refrigerator is running.

To switch off/on the blue light:

- Press the frozen food compartment button for 10 seconds.

To ensure if the refrigerator is still running open the door. The control panel and interior lights are on.

Use of the fresh food compartment

A number of shelves and drawer dividers are secured to prevent inadvertent entrapment and possible suffocation of children.

- Do not remove or reposition the secured shelves or secured drawer dividers, so children have no space to be entrapped in the refrigerator.

To prevent ice build-up in your refrigerator, always cover liquid products, let warm products cool down before placing them inside the refrigerator. Do not open the door any longer than necessary.

- The maximum load of the large shelf is 12 kg and the maximum load of the small shelf is 6 kg.
- For model T2095: the maximum storage capacity of the middle drawer is 8kg and the bottom drawer 20kg.
- For other models: the maximum storage capacity of the drawer is 15kg.

To organise your refrigerator as desired, the unsecured storage shelves, drawer dividers and door bins can be moved.

Ensure that the door can still be closed after reorganizing shelves and bins.

To reposition an unsecured storage shelf:

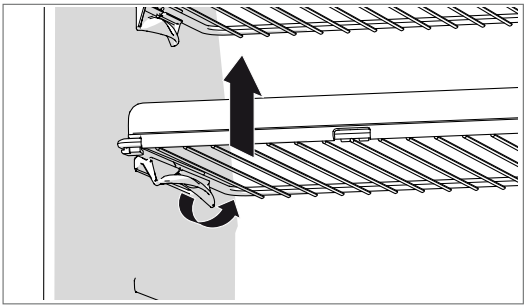

- Turn the plastic clamp of the storage shelf upwards.
- Lift the left side a bit.

Replace storage shelf

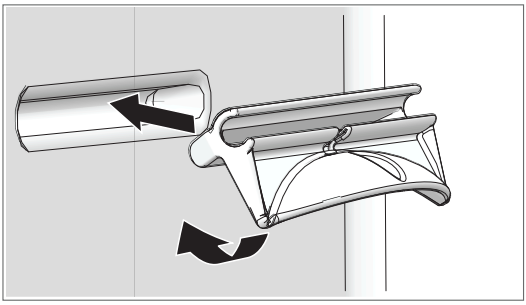

- Move the storage shelf to the desired position.
- Place right side (side without clamp) of the storage shelf in the refrigerator wall.
- Place the other side (with the clamp) in the corresponding groove.
- Turn the plastic clamp downwards.

In the drawing the clamp is shown without the shelf.

Use of the frozen food compartment

The frozen food compartment can be used to store perishable foodstuffs or frozen foods. Refer to *Selecting cooling level frozen food compartment* for more information on the regulated frozen food compartment.

While driving

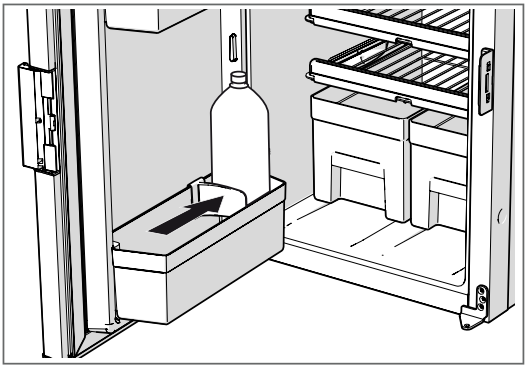

- Make sure no products in the refrigerator can move while driving. Secure the bottles in the door with the bottle retainer, bottles and large products in the drawer with drawer dividers and raise the shelf food retainers to hold the products on the shelves.

- Close the refrigerator door.

  When you push to close the door of the refrigerator, the door locks automatically.

- For models with a travel lock: secure the lock. The door lock will extra prevent the door from opening while driving.

6. Maintenance and cleaning

Read the applicable instructions in chapter *Safety* first.

Thetford recommends an annual inspection service by an approved service centre. Clean the refrigerator on a regular basis.

- Always remove any spills or contamination immediately with a mild household cleaner and soft cloth.
- If needed, remove the shelves, door bins, vegetable bins and clean the inside of the refrigerator and loose parts.
- Clean the outside of the refrigerator with a damp soft cloth.

Only for maintenance purposes it is allowed to remove a secured storage shelf or secured drawer divider. Always replace and secure the storage shelf or drawer divider to the exact same installation position after maintenance.

Only for refrigerators installed on floor level: Dust underneath the refrigerator might block the airflow required for a proper performance. Therefore, frequently remove all dust from this area, e.g. using a vacuum cleaner.

- Thetford recommends to clean the cooling system once every 2 years or when you suspect bad performance or too high energy consumption.
- For models T2160, T2175 and T2208 a filter is in place. it is strongly recommended to clean the filter once a year, or more often if necessary. Always replace the filter to the exact same installation position after maintenance.

Replace a secured storage shelf

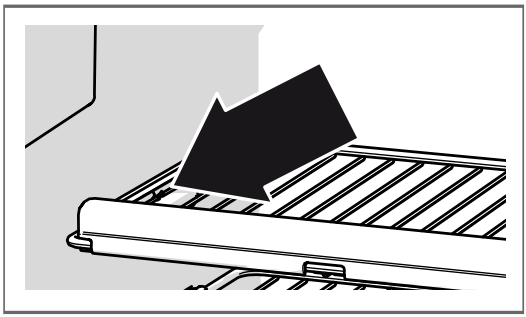

- Remove the screws that are placed in the shelf near the shelf clamp.

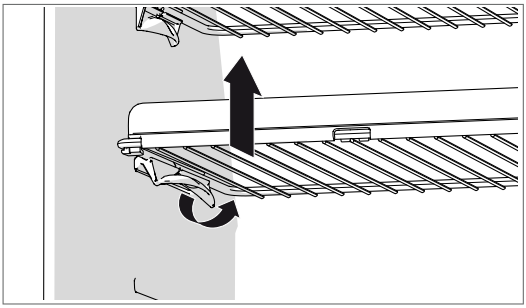

- Turn the plastic clamp of the storage shelf upwards.
- Lift the left side a bit.
- Remove the storage shelf.

To replace the secured storage shelf after maintenance:

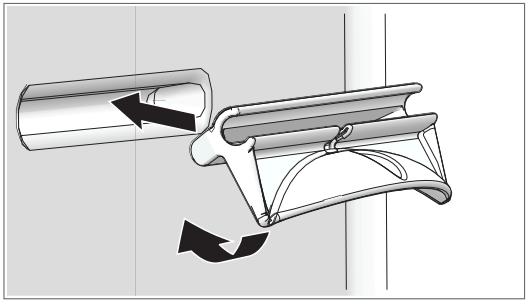

- Place right side (side without clamp) of the storage shelf in the refrigerator wall.
- Place the other side (with the clamp) in the corresponding groove.
- Turn the plastic clamp downwards.

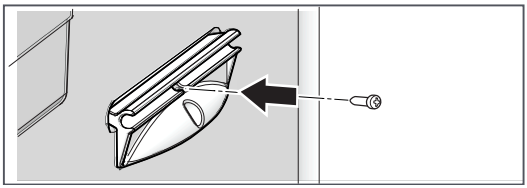

- Replace the screw.

In the drawings, the clamp is shown without the shelf.

Replace a secured drawer divider

- Undo the screws that secure the drawer divider.
- Remove the drawer divider

To replace the secured drawer after maintenance:

- Place the drawer divider.
- Replace the screw.

Remove a slide-out box system (T2138 / T2152 only)

To temporarily remove the slide-out box system:

- Completely open the refrigerator door.
- Remove the slide-out box, by pulling the slide-out box towards you while you tilt the box upwards.
- Remove the shelf with slide-out box system, refer to *Replace a secured storage shelf*.
- Push the rail system to the right, as illustrated.

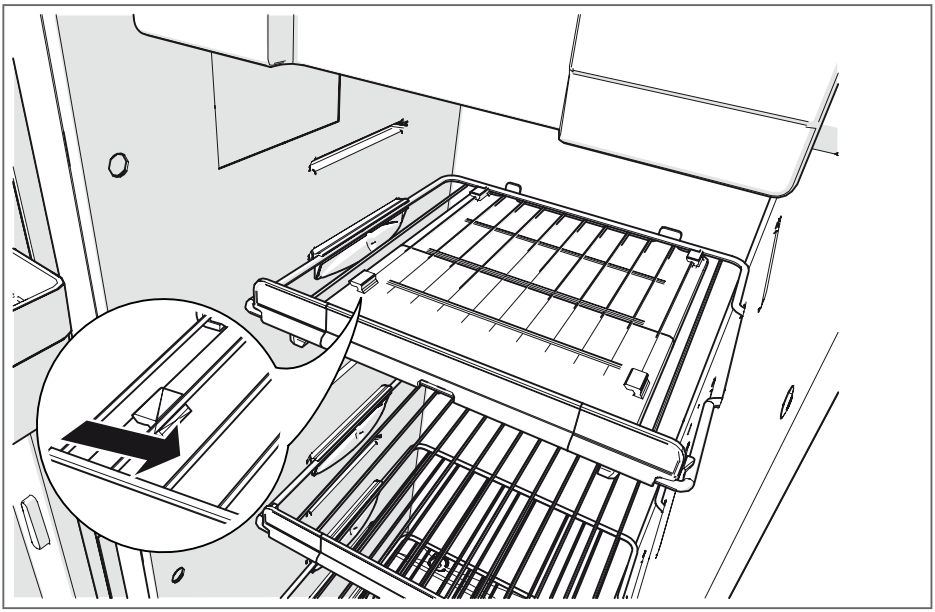

- Clean the slide-out box and slide out box system.
- After cleaning, place the system back in reverse order.

Make sure the slide-out box system snaps into place.

Remove a drawer

T2095

To remove the drawer:

- Open the door.
- Locate the left unlocking button of the drawer guides and push the unlocking button up.
- Locate the right unlocking button of the drawer guides and push the unlocking button down.
- Pull the drawer out of the drawer guides and clean it.
- After cleaning, slide the drawer guides back into its original position until they snap into place.

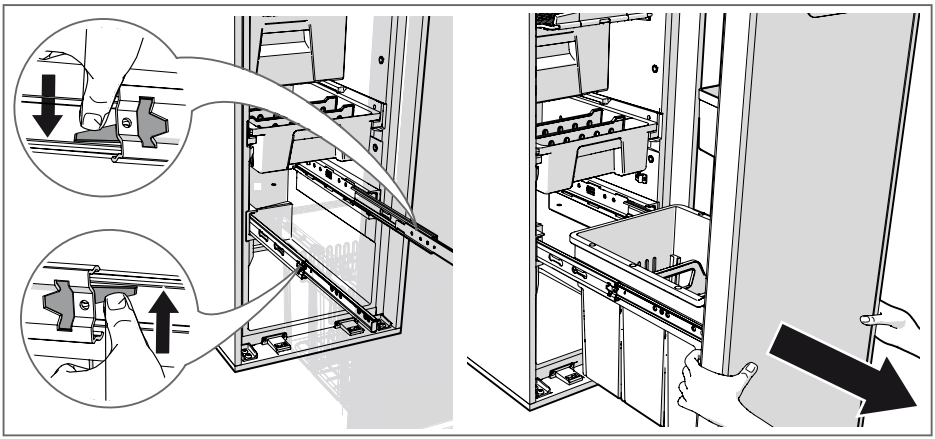

The door with drawer is one part. Preferably perform this procedure with two people.

T2120 / T2138 / T2152

To remove the drawer:

- Completely open the refrigerator door and pull the drawer until the stop.
- Then lift the drawer at the front, as illustrated.

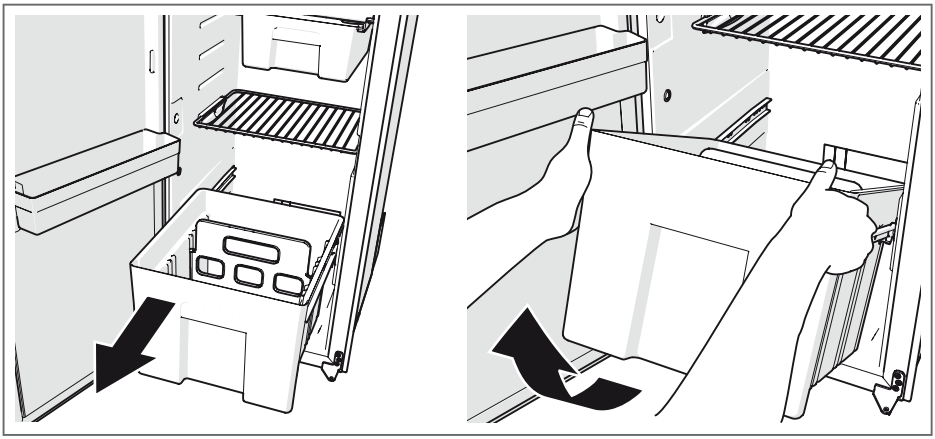

- Remove and clean the drawer.
- After cleaning, place the drawer back in reverse order.

T2160 / T2175 / T2208

To remove the drawer:

- Pull the drawer until the stop and push it a little bit back.
- Then push the guide locks backwards, as illustrated.

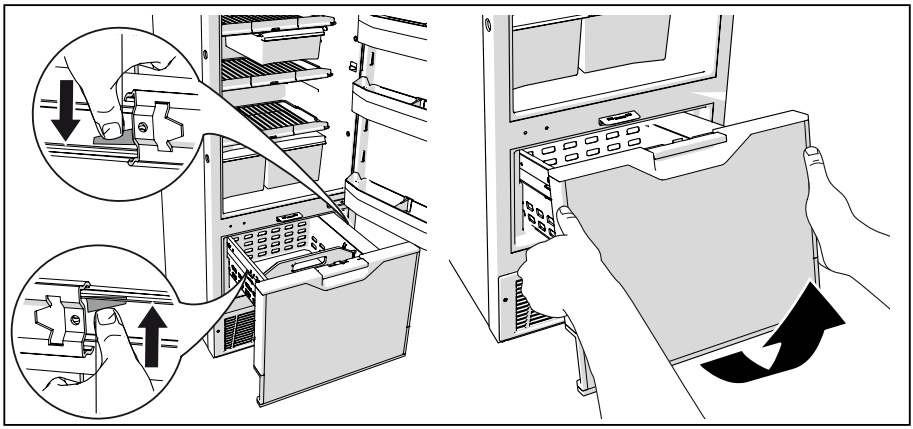

- Pull the drawer further to the front and lift the wheels over the curves.
- Remove and clean the drawer.
- After cleaning, pull out the guides until they snap into place.
- Place the drawer back in reverse order.

Storage

If you do not use the refrigerator for a longer period:

- Empty the refrigerator.
- Defrost the frozen food compartment.
- Clean the complete refrigerator thoroughly.
- Keep the refrigerator door and the frozen food compartment door open.

Keep the doors open: T2095

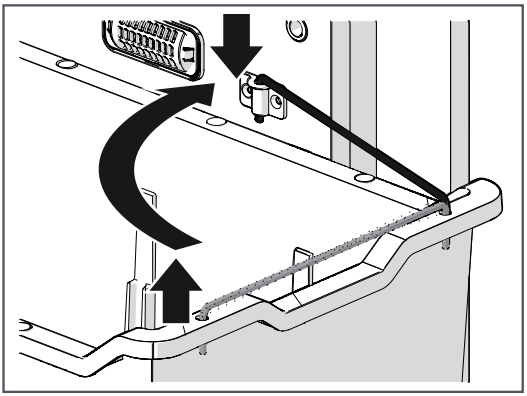

- Open the door.
- Pull left side of the storage lock out of the bottle and vegetable bin.
- Rotate the storage lock towards the sidewall of the appliance.
- Secure the storage lock in the hole in the sidewall.

Do not use storage lock while driving.

To use the refrigerator after storage:

- Pull the storage lock out of the hole in the sidewall.
- Rotate the storage lock back to its original position.
- Push the storage lock back into the bottle and vegetable bin.
- Close the door.

Keep the doors open: all other models

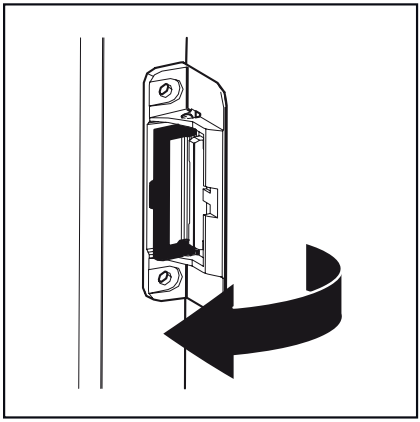

- Open the door.
- Rotate the storage lock.
- Close the door until you hear the first click.

Make sure the door is still slightly open.

To use the refrigerator after storage:

- Rotate the storage lock back to its original position.

Defrosting

Ice can build up in the frozen food compartment and on the back surface of the refrigerator compartment. When more than 3mm of ice has built up in any location of either compartment, the refrigerator needs to be defrosted. Failure to do this may damage the cooling system. To defrost the refrigerator:

- Remove all food.
- Switch off the refrigerator.
- Remove the drawer as described under *Maintenance and cleaning*.
- Put a towel in the frozen food compartment and on the bottom of the fresh food compartment to catch any leakage water.
- Make sure the frozen food compartment door is opened by a small gap, by inserting a non-sharp object in between the frozen food compartment door seal and the cabinet liner.
- In case the external drainage possibility is not used, empty the drip tray when all ice is gone.
- Thoroughly dry the refrigerator after defrosting.

7. Disposal

When your refrigerator has reached its end of life, dispose the product according to the local rules. Do not dispose the refrigerator with normal household waste.

Risk of fire and explosion with flammable refrigerant R600a.

Table 1: Environmental Protection

	Discarded electric appliances are recyclable and should not be discarded in the domestic waste. Please actively support us in conserving resources and protecting the environment by returning this appliance to the collection centres (if available).

8. Technical specifications

Refrigerator specifications

Model	T2095	T2120	T2138	T2152
Display	LED display / push-buttons	Capacitive touchscreen	Capacitive touchscreen	Capacitive touchscreen
Total volume (L)	90	119	138	150
Volume frozen food comp. (L)	7.1	17.0	11.6	17.0
Energy consumption (kWh/24h)*	0.36	0.45	0.50	0.47
Weight (kg)	33.0	32.0	37.0	38.5
Climate class day mode	SN-T (10-43°C)	SN-T (10-43°C)	SN-T (10-43°C)	SN-T (10-43°C)
Climate class night mode	SN (10-32°C)	SN (10-32°C)	SN (10-32°C)	SN (10-32°C)

Model	T2156	T2160	T2175	T2208
Display	Capacitive touchscreen	Capacitive touchscreen	Capacitive touchscreen	Capacitive touchscreen
Total volume (L)	142	158	174	218
Volume frozen food comp. (L)	55.0	30.5	33.5	43.0
Energy consumption (kWh/24h)*	0.54	0.55	0.56	0.45
Weight (kg)	38.0	40.0	41.0	54.5
Climate class day mode	SN-T (10-43°C)	SN-T (10-43°C)	SN-T (10-43°C)	SN-T (10-43°C)
Climate class night mode	SN (10-32°C)	SN (10-32°C)	SN (10-32°C)	SN (10-32°C)

** Energy consumption measured according to IEC625520-2020.*

9. Service & questions

Read the applicable instructions in chapter *Safety* first.

Service

Before starting any service work, disconnect the appliance from the electrical supply. After each service the appliance must be checked for electrical safety.

All servicing must be carried out by an approved competent person.

Troubleshooting

Problem	Possible-cause	Solution
Refrigerator is not cooling, compressor does not run at all	Battery voltage too low	Recharge battery
	Start delay of 1 minute (no issue)	Wait 1 minute
	Overheat due to high ambient	Turn off refrigerator for 1 hour, vent the vehicle, switch off night mode
	Vehicle fuse has blown	Check fuse rating, replace with 15A
Frozen food compartment not freezing or cold enough	The frozen food compartment is in off-mode	Switch on the frozen food compartment
		Select a higher cooling level
Refrigerator is not cooling, compressor starts but switches off directly	Overheat due to high ambient temperature	Turn off refrigerator for 1 hour, vent the vehicle, switch off night mode
Refrigerator is overcooling	Temperature setting too high	Choose a lower temperature setting
Refrigerator is not cooling, compressor runs continuously	Go to a service centre	

Problem	Possible-cause	Solution
Refrigerator has insufficient cooling	Overheat due to high ambient temperature	Turn off fridge for 1 hour / Vent the vehicle.
	Ventilation openings, complete or partially blocked	Clean or remove blockage
	Door is not properly closed	Close door / Make sure door seal in good order
	Too much ice on evaporator (more then 3mm)	Defrost evaporator / Make sure door seal is in good order
Refrigerator makes more noise than normal	High ambient temperature (more than 30ºC)	Turn on night mode / Wait until the refrigerator has reached the selected temperature setting
	Warm products have been placed inside the refrigerator	
	Refrigerator is turned on after it has been off for a long time	
	A low temperature setting is selected	
The light is not working properly	Go to a service centre	

For more troubleshooting check the website *www.thetford.com*

Questions

If you have questions about your product, parts, accessories or authorised services visit *www.thetford.com*.

If you contact an authorised local Service Centre in your country, provide the details of the model and serial number plus the date of purchase.

Warranty

For our warranty clause, please refer to the conditions mentioned on *www.thetford.com*.

Declaration of Conformity

Thetford hereby declares that this product is in compliance with the essential requirements and other relevant provisions of the applicable Regulations, Directives and Standards. A copy of the Declaration of Conformity can be found at *www.thetford.com*.

EUROPEAN HEADQUARTERS
Thetford B.V.
P.O. Box 169
4870 AD Etten-Leur
The Netherlands

T +31 76 504 22 00
F +31 76 504 23 00
E info@thetford.eu

UNITED KINGDOM
Thetford Ltd.
Unit 6
Brookfields Way
Manvers, Rotherham
S63 5DL, England
United Kingdom

T +44 844 997 1960
F +44 844 997 1961
E infogb@thetford.eu

GERMANY
Thetford GmbH
Schallbruch 14
D-42781 Haan
Deutschland

T +49 2129 94250
F +49 2129 942525
E infod@thetford.eu

FRANCE
Thetford S.A.R.L.
Parc BUROPLUS / Bâtiment 6
18, Boulevard de la Paix
CS 80008
95895 Cergy Pontoise Cedex
France

T +33 1 30 37 58 23
F not available
E infof@thetford.eu

ITALY
Thetford Italy c/o Tecma s.r.l.
Via Flaminia
Loc. Castel delle Formiche
05030 Otricoli (TR)
Italia

T +39 0744 709071
F +39 0744 719833
E infoi@thetford.eu

SPAIN AND PORTUGAL
Mercè Grau Solà
Agente para España y Portugal
C/ Castellet, 36 bxs 2a
08800-Vilanova i la Geltrú
Barcelona
España

T +34 938 154 389
F not available
E infosp@thetford.eu

SCANDINAVIA
Thetford Scandinavia
Bangatan 6
521 43 Falköping
Sverige

T +46 31 336 35 80
F not available
E infos@thetford.eu

AUSTRALIA
Thetford Australia Pty. Ltd.
130-132 Freight Drive
Somerton VIC 3062
Australia

T +61 3 9358 0700
F not available
E infoaus@thetford.com.au
www.thetford.com.au

CHINA
Thetford China
Rm. 1207, Coastal Building
(East Block)
Haide 3rd Road, Nanshan District
Shenzen, 518054
China

T +86 755 8627 1393
F +86 755 8627 1673
E info@thetford.cn
www.thetford.cn

www.thetford.com

Copyright 2017-2024 Thetford B.V. All rights reserved.
693098/1124-V01