THETFORD

INSTALLATION MANUAL

Refrigerator
T2000 series

MANUAL COMPANION PAGE

Products related to this Thetford T2000 Series Installation Manual - Including T2095

Useful CaravansPlus links for parts, accessories, guides and support.

Shop over 8,000 caravan accessories.

Find related products, replacement parts and practical help from CaravansPlus.

- 8,000+ products
- Specialist support

Related product

Thetford T2095 Drawer Compressor Fridge - 90L - 12V

692967SP - The Thetford T2095 is a compact refrigerator designed to fit seamlessly into small spaces, making it a...more info.

View item

Helpful links

12V Fridges

Shop category

Appliances & Parts

Shop category

Towing & Car Accessories

Shop category

RV Accessories

Shop category

Awnings, Screens & Mats

Shop category

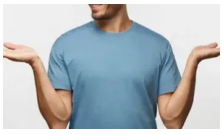

Search Products

Find parts

Guides & Articles

Helpful info

Contact Support

Ask us

EN
Original Installation Manual

Contents

1 Introduction....2
2 Safety....3
3 Serviceability....5
4 Designation codes, drawings and models....6
5 Technical specifications....7
6 Before installation....10
7 Install the refrigerator....16
8 After installation....19
9 Service & questions....21

1. Introduction

General

This is the installation manual for the Thetford T2000 series refrigerator. The manual is meant for qualified installers who will install the refrigerator in a caravan or camper.

Read the information and instructions carefully and follow them strictly to install the refrigerator safely and correctly.

Also read the warnings in the user manual before testing the refrigerator after installation.

This document is version 693097/1124-V01 of the installation manual.

Our policy is one of continuous development and improvement. Specifications and illustrations may change subsequent to publication.

Please visit www.thetford.com for the most recent version.

Symbols

The following symbols may be used in this manual:

Warning. Risk of serious injury and/or damage.

Caution. Risk of moderate injury and/or damage.

Attention. Important information.

Note. Additional information.

Video. Additional instruction video available.

2. Safety

General

Risk of serious injury through burning, explosion, clamping, electrocution, suffocation and poisoning or damage to the product.

- Do not modify this appliance, unless the modification is authorised and carried out by the manufacturer or their agent.
- If the appliance is not installed in accordance with national and European law, regulations, rules and standards, this will void the warranty and may lead to criminal prosecution.
- Wear the correct Personal Protective Equipment during the installation. Also follow the applicable safety regulations.
- There are sharp edges and corners at the rear of the refrigerator and the installation frame. Always wear protection against cuts when installing the refrigerator.
- Only qualified and certified professionals are allowed to install the appliance and connect its electrical and gas components.
- Never expose the appliance to water or moisture.
- Do not use the drawer as a step or ladder.
- Any error messages coming from the appliance and shown on the master display, should not disturb the driver. For example: lights and/or sounds coming from the master display while driving.

Installation

Risk of serious injury through burning, explosion, clamping, electrocution, suffocation and poisoning or damage to the product.

- Make sure the appliance is transported and handled in the upright position.
- If the appliance needs to be transported on its side, ensure that only the correct side is facing down. Follow the instructions as indicated by the handling sticker on the side of the refrigerator ("This side up allowed during handling").
- If the appliance has been transported and/or been laid on its side, let it stay upright for at least 2-3 hours before switching on.
- Do not install this refrigerator in a fixed indoor cabin or other dwelling applications. This refrigerator is made for use in RV and towable applications.

- To avoid a hazard due to instability of the appliance, it must be fixed in accordance with the instructions.
- The refrigerator must be installed in a way that allows easy access for maintenance and repairs.
- Do not install the refrigerator directly on carpet. Put the refrigerator on a metal or wood panel that extends the full width and depth of the refrigerator.
- Do not drill, cut or use excessive force on the refrigerator walls, except for screwing predefined positions. This may damage the vacuum insulation panels that have been foamed in.
- Do not screw into the refrigerator cabinet.
- Make sure that no sawdust, insulation, or other construction debris is on the refrigerator or in the enclosure. Debris can cause a combustion hazard and prevent the refrigerator from operating correctly.
- When installing the appliance, ensure cables are not trapped or damaged.
- Install the electrical connections in such a way that wires can't come into contact with hot or sharp parts.
- Route the cables away from the appliance and other heat sources.
- Never reposition or change the electronic components unless stated otherwise in this manual.
- The performance of the cooling system may be affected by adjacent heat sources such as an oven or stove. Protect the cooling system against any heat sources by fitting insulation.

  Adding insulation can cause condensation between the fridge, oven and furniture.
- Make sure no equipment that produces sparks or flames is installed close to the cooling system.
- Use only genuine and approved parts and materials.
- In order to prevent the risk of fire in the event of uncontrolled leakage of the refrigerant system, make sure that the refrigerant charge per net room volume does not exceed 8 g/m^3. Net room volume is defined as the gross room volume minus the volume of any product, equipment, or objects located in the living area. The refrigerant charge amount can be found on the serial label.

Never open or damage the cooling system at the back or on the inside of the cooling system. The cooling system is pressurised and contains flammable substances.

Electrical

Risk of serious injury through burning, explosion, clamping, electrocution, suffocation and poisoning or damage to the product.

- The electronic connections must be installed in accordance with the latest technical regulations.

- The electrical connections have to comply with EN60335.
- Electrical installation shall comply with the local authority requirements.
- Do not locate multiple portable socket-outlets or portable power supplies at the rear of the appliance.
- Route the cables away from the appliance and other heat sources.
- There is no load dump protection circuit present on the CI-bus refrigerator electronics. Thetford requires that a load dump circuit (which complies with the relevant regulations) is installed on the CI-bus master if the refrigerator is connected to the CI-bus.
- The ground on the CI-bus connector should not be connected. Ensure that the cooling system is using the same power supply ground as the CI-bus master unit. The ground on the CI-bus connector is only needed when using, for example, an external CI-bus service tool.

Commissioning

Do not switch on the appliance without first carrying out the visual and functional checks.

Service

Risk of serious injury through burns, explosion, suffocation,electrocution, fire and poisoning or damage to the appliance.

- This appliance should only be serviced by a qualified and certified professionals.

3. Serviceability

The installer of Thetford products is responsible for correct installation according to the Thetford installation instructions to ensure the functionality and serviceability of the product.

In terms of serviceability, this means that a dealer or authorised Thetford service partner must be able to remove and re-install the Thetford product within the time that is allowed according to the Thetford time-list, using standard tools and equipment.

This is to claim any warranty during the warranty period after the purchase date.

In case of any queries on this subject, a Thetford local service representative can be contacted for additional support related to the installation of the product.

4. Designation codes, drawings and models

Each product has a specific identification code, the designation code. The designation code can be found on the data badge. See Service & questions for the location of the data badge. The different positions of the code stand for different variations of the refrigerator. In these instructions, the designation will be used as reference.

Table 1: Designation example

T2120	C	– N	191	A	301	R	25	CI
Refri-gerator model	Refri-gerator version	Market	Type of foamed cabinet	Type of cooling unit	Type of door	Hinge posi-tion	Type of control panel	Type of com-munic-ation

Table 2: Available drawings and models

Model*	2D drawings	3D files	Door panels
T2095E-NxxxE	LE1554 / LE1560 / LE1557*** / LE1570 (side vent)	LE1556	LE1555
T2095E-NxxxAB	LE1554 / LE1560 / LE1557*** / LE1570 (side vent)	LE1574	LE1555
T2095E-ZxxxAC	LE1554 / LE1560 / LE1557*** / LE1570 (side vent)	LE1579	LE1555
T2120	LE1599	LE1600	LE1601
T2138	LE1484	LE1485	LE1495
T2152	LE1488 / LE1536**	LE1489 / LE1537**	LE1496
T2156	LE1542	LE1543	LE1548
T2160	LE1482	LE1483 / LE1492	LE1497 / LE1498
T2175	LE1480 / LE1538**	LE1481/LE1491 / LE1539**	LE1497 / LE1498
T2208	LE1589 / LE1575**	LE1589 / LE1590 / LE1576**	LE1577 / LE1578

The 2D drawings and door panels drawings are available upon request, 3D files are only available for the professional builder.

** Not all models are available for the Aftermarket (A-market in Table 1: Designation example*

***For Australian models (Z-market in Table 1: Designation example), an installation frame is included for a protruding installation.*

****This drawing describes the required removal space after installation.*

5. Technical specifications

Refrigerator specifications

Model	T2095	T2120	T2138	T2152
Display	LED display / push-buttons	Capacitive touchscreen	Capacitive touchscreen	Capacitive touchscreen
Total volume (L)	90	119	138	150
Volume frozen food comp. (L)	7.1	17.0	11.6	17.0
Energy consumption (kWh/24h)*	0.36	0.45	0.50	0.47
Weight (kg)	33.0	32.0	37.0	38.5
Climate class day mode	SN-T (10-43°C)	SN-T (10-43°C)	SN-T (10-43°C)	SN-T (10-43°C)
Climate class night mode	SN (10-32°C)	SN (10-32°C)	SN (10-32°C)	SN (10-32°C)

Model	T2156	T2160	T2175	T2208
Display	Capacitive touchscreen	Capacitive touchscreen	Capacitive touchscreen	Capacitive touchscreen
Total volume (L)	142	158	174	218
Volume frozen food comp. (L)	55.0	30.5	33.5	43.0
Energy consumption (kWh/24h)*	0.54	0.55	0.56	0.45
Weight (kg)	38.0	40.0	41.0	54.5
Climate class day mode	SN-T (10-43°C)	SN-T (10-43°C)	SN-T (10-43°C)	SN-T (10-43°C)
Climate class night mode	SN (10-32°C)	SN (10-32°C)	SN (10-32°C)	SN (10-32°C)

** Energy consumption measured according to IEC625520-2020.*

Electrical specifications

Power input	10.4-16.0V DC (at the refrigerator)
Cable dimensions (Cable thickness vs cable length)	▪ 2.5mm2 = < 2.5m ▪ 4mm2 = < 4m ▪ 6mm2 = < 6m
Fuse	15A in power supply system near the power supply source
Battery capacity	Advised: 2 x 95Ah
DC power connectors	Refrigerator: Stocko VV 2041.100-G or equivalent Supply cable counterpart: Stocko VV 2041.200-G or equivalent
CI-bus connectors	Refrigerator: Molex 39012020 Supply cable counterpart: Molex 39012021

Layout of the DC power connectors

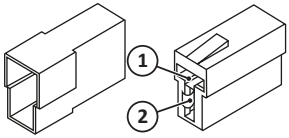	**1.** + (Red) **2.** - (White)

Layout of the CI-bus connectors

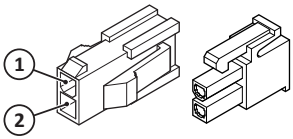	**1.** Data (White) **2.** Mass (White-Blue)

Position of the CI-bus connectors

T2095*

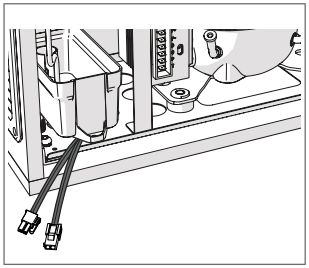

T2120/T2152/T2156

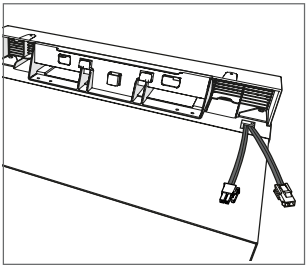

T2138/T2160/T2175/T2208*

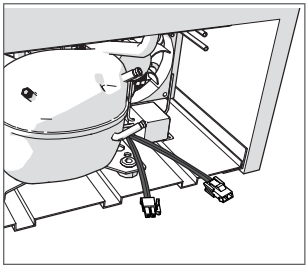

**Left or right may vary by model type*

6. Before installation

Read the applicable instructions in chapter *Safety* first.

Installation dimensions

- Use the mounting dimensions as shown below.

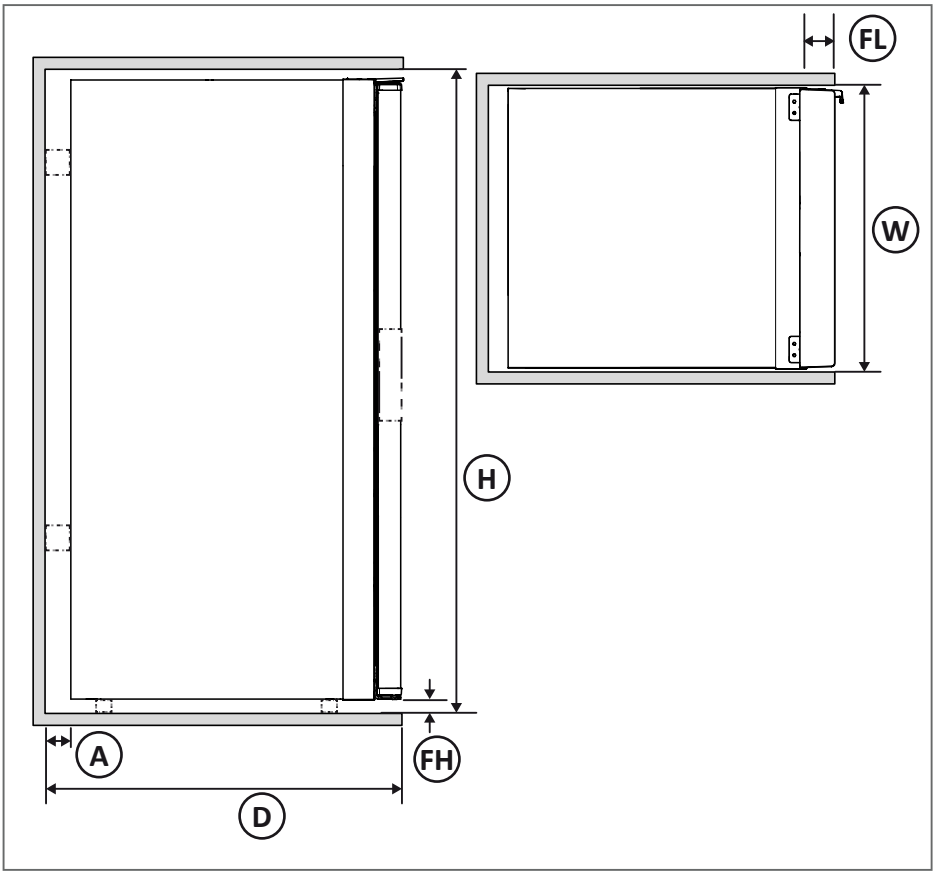

Model	H	W	D	FL	FH	A
T2095	908	400	682	55	8	5
T2120	1272	420	569	42	28	40-60
T2138	1602	420	503	55	3	n/a

Model	H	W	D	FL	FH	A
T2152*	1504	420	569	42	28	40-60
T2156	1504	420	570	43	28	40-60
T2160	1249	527	563	55	3	5
T2175*	1249	527	613	55	3	5
T2208*	1464	527	613	55	3	5

**For Australian models (Z-market in Designation codes, drawings and models), an installation frame is included for a protruding installation.*

Ventilation

The refrigerator performance depends on good ventilation.

T2095

Ventilation takes place via the side vent. See *Designation codes, drawings and models*.

Vent and screws delivered by Thetford.

T2095E-NxxxE

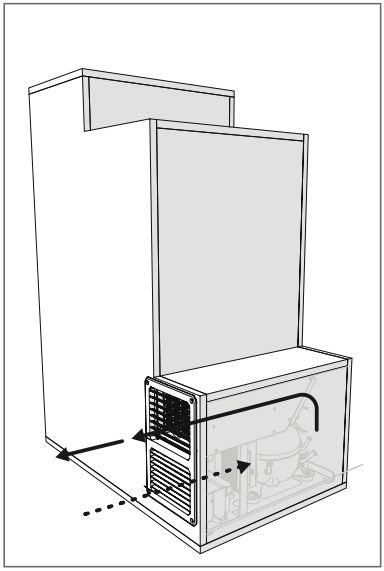

T2095E-NxxxAB / T2095E-ZxxxAC

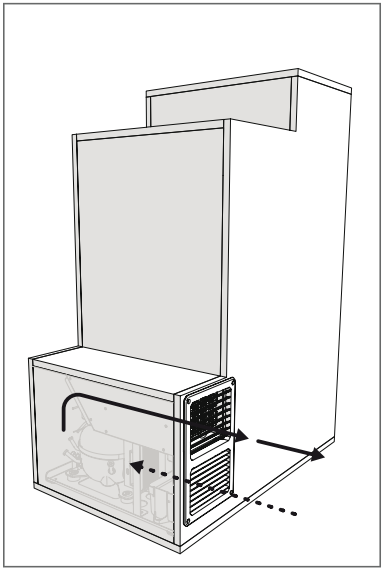

T2120, T2152 and T2156

Ventilation for takes place through the front vent openings in the refrigerator.

Ambient air enters through the bottom at the front and is forced through the cooling system.

Heated air is pushed away via the top vent opening.

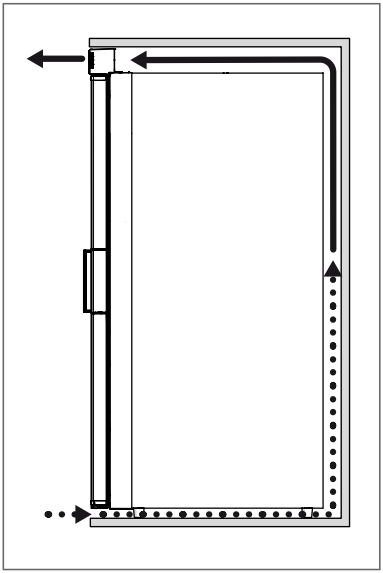

T2138, T2160, T2175 and T2208

Ventilation takes place through the integrated and insulated cooling unit box at the bottom part of the refrigerator.

For T2138: Do not place insulation material of the vehicle directly against the backside of the fridge. This may cause condensation issues.

- For T2160, T2175 and T2208: Do not remove stops at the back of the fridge. Removing this may result in condensation issues.

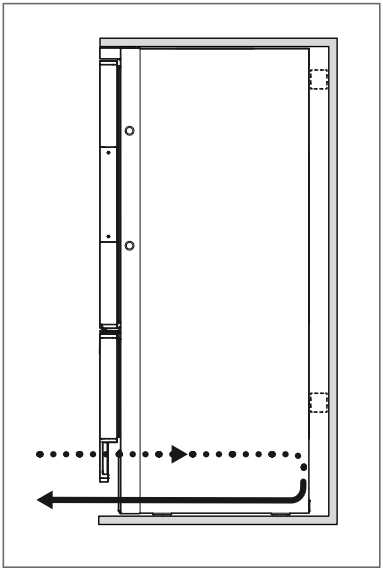

For models T2160, T2175 and T2208 a filter is in place. It is strongly recommended to clean the filter once a year, or more often if necessary. Always replace the filter to the exact same installation position after maintenance.

Power supply

- Connect the DC power supply according to the sticker on the refrigerator and the values mentioned in *Technical specifications*.

Installing door panel

To match the refrigerator with the interior, a door panel can be installed as shown below.

Never lift or handle a refrigerator at the power supply cables.

- Always pay attention to the label on the side of the refrigerator: "This side up allowed during transport and handling".

The door panel for the door should be fitted before installing the refrigerator.

- For T2156: To insert rigid door panels in the fresh food door it is recommend to take the door out for easier assembly and to prevent scratches. See *Door conversion (not applicable for T2095)* for tips.
- Place the refrigerator on its side, refer to the handling sticker on the side of the refrigerator ("This side up allowed during handling").

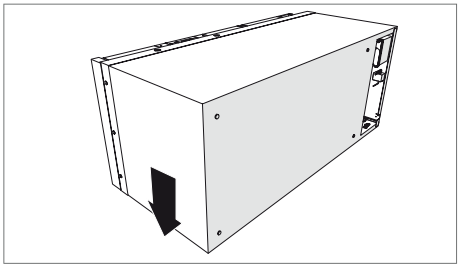

- Remove the door handle cover (1) by removing the 2 screws (not applicable for T2095)
- Slide the panel (2) in the frame of the door
- Click the panel retainer (3) in place.
- Install the door handle cover (1) and put the screws in.

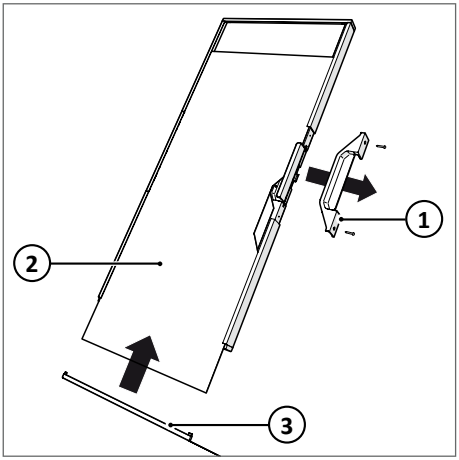

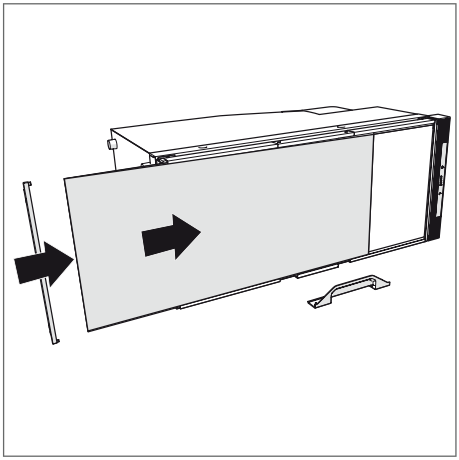

Panel sizes

Model	Door type	Panel size (mm)
T2095	Flat	H 876 x W 382
T2120	Flat	H 1162 x W 396
T2138	Flat	H 1366 x W 396
T2152	Flat	H 1394 x W 396
T2156	Flat	H 685 x W 394
T2160	Flat cabinet	H 700 x W 499
	Flat drawer	H 382 x W 499
T2175	Flat cabinet	H 700 x W 499
	Flat drawer	H 382 x W 499
T2208	Flat cabinet	H 859 x W 499
	Flat drawer	H 369 x W 499

See chapter *Designation codes, drawings and models* for detailed drawings.

Door conversion (not applicable for T2095)

- Open the door a little and push the hinge pin down with a screwdriver (1).
- Pull the hinge corner to the front (2).
- Lift the door (3) out of the hinges.

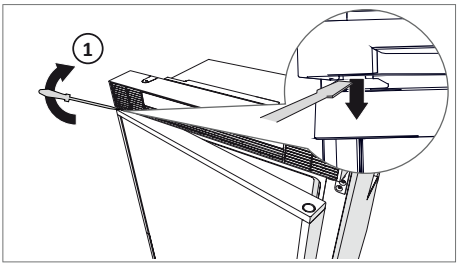

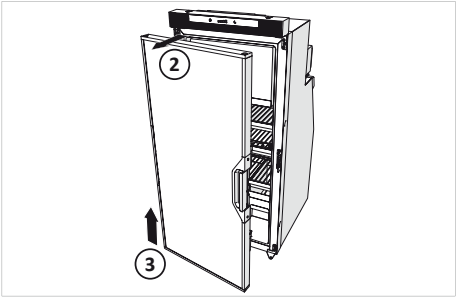

- Move the lock (4) on the refrigerator from one side to the other.
- Move the hinges, hinge pin, hinge hole plug, the handle (5) and the travel lock (if equipped) on the door, from one side to the other.
- Turn the door panel 180 degrees (6).

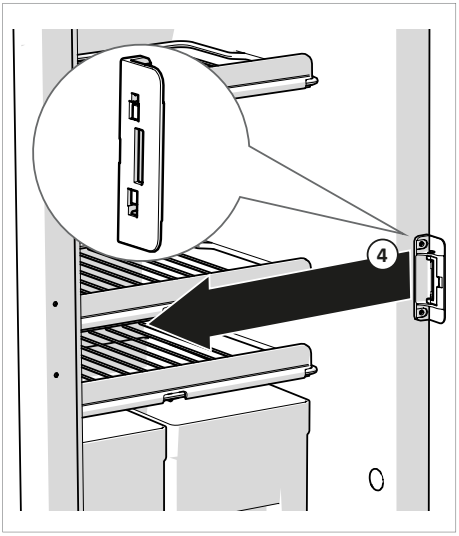

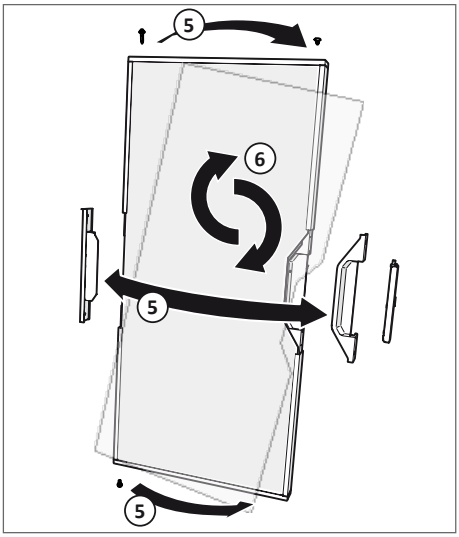

For refrigerators with a travel lock: use the spare hinge which is delivered inside the refrigerator.

7. Install the refrigerator

Read the applicable instructions in chapter Safety first.

Connect electrical supplies

For model T2095:

First mount the furniture before connecting the power supply via the vent.

For models T2120, T2152 and T2156:

It is advised to have the power supply in the vehicle to be routed via the roof. In this way an over-length of cable is not needed and the power supply cable cannot block the airways.

For models T2138, T2160, T2175 and T2208:

Connect the DC power connector before any furniture is mounted. Make sure that the DC and CI-bus cable are not trapped between the refrigerator and furniture.

Power supply

- Connect the appliance to an onboard 12V battery in the vehicle. This battery should be exclusively intended for powering on-board devices. Connecting to the engine battery is not advised.
- Fit a general main switch that enables all poles disconnection from the 12V power supply source to be able to delete the electrical standby consumption when vehicle is in storage. This to prevent for empty battery.
- Fit a battery discharge protection circuit to prevent damage to the 12V battery when it is at low charge.

For easy maintenance, leave sufficient over-length in the power supply cable so that the refrigerator can be moved at least 10cm forward.

Central control panel

To connect the appliance to the compatible central control board of the vehicle, use the CI-bus protocol (refer to *www.civd.de*).

For location of the location of the CI-bus cables and connectors on the appliance refer to *Technical specifications*.

- Connect the appliance to the on board control panel using the CI-bus connectors.
- Fit a load dump protection circuit to the CI-bus master.
- Do not connect the ground of the CI-bus connector.
- Connect the ground of the appliance to the same supply as the CI-bus master unit

Installing

- Slide the refrigerator to the back of the furniture.

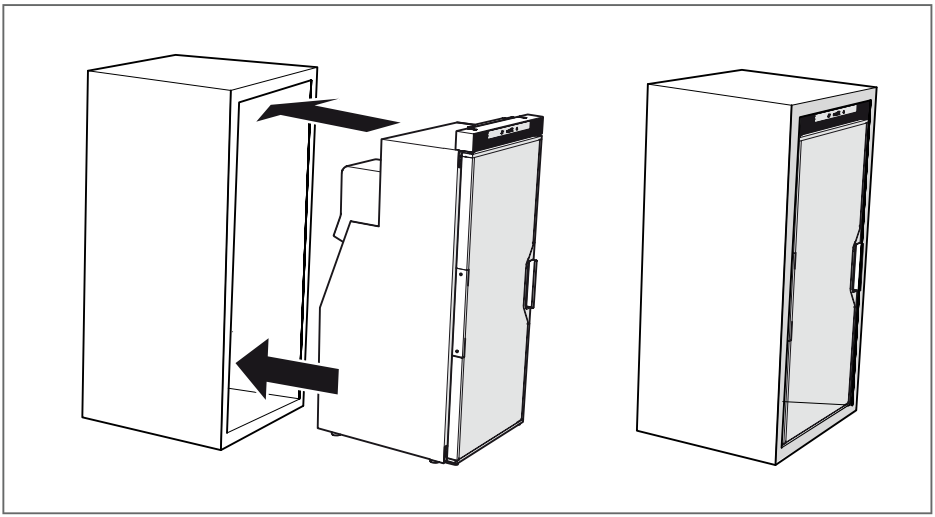

The space holders on the back will stop the fridge at correct position.

- Fix the refrigerator in place with the screws, using the pre-drilled positions in the cabinet.

Use a screw suitable for below hole dimensions.

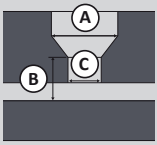	T2095		T2138		T2120 / T2152		T2156	T2160 / T2175 / T2208	
	side	floor	side	floor	side	floor	side	side	floor
A: Ø	9mm	M8 10.9 *	9mm	6mm	9mm	9mm	9mm	9mm	5mm
B	6mm		6mm	5mm	6mm	34mm	6mm	6mm	11mm
C: Ø	4.0mm		4.5mm	6mm	4.5mm	4.5mm	4.5mm	4.5mm	5mm

**Bolts via vent. Length of bolt depends on installation.*

Fixating points

The refrigerator has fixating points both on the left and right side of the cabinet.

T2095

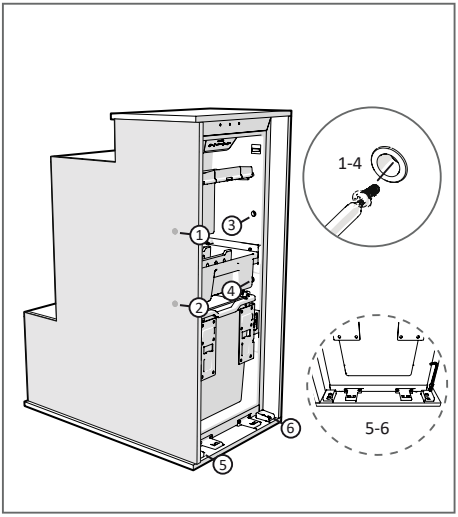

T2138

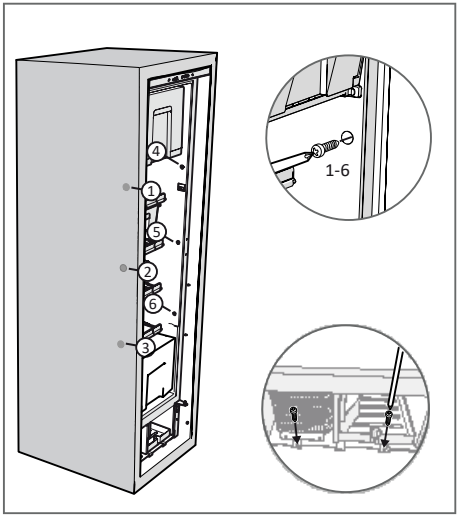

T2120* / T2152

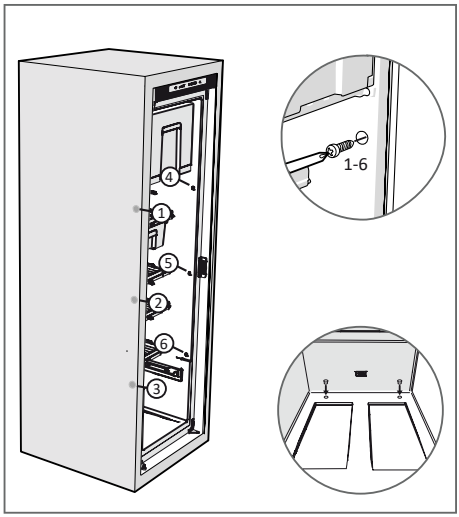

T2156

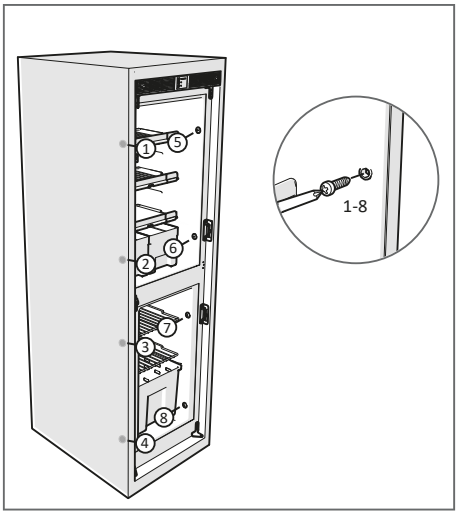

**T2120 has less height and is therefore equipped with 4 fixating points.*

T2160/T2175/T2208*

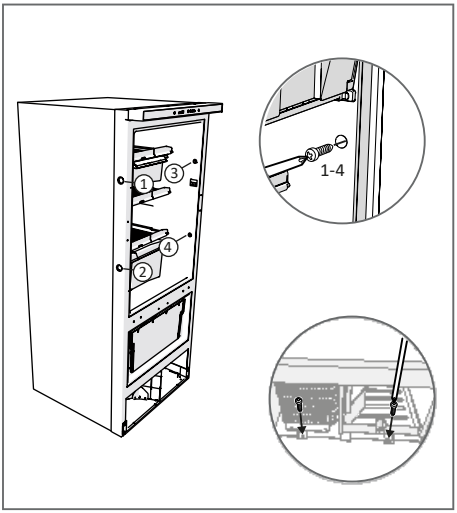

**T2208 is equipped with 6 fixating points.*

- Use the white caps for finishing.

Ensure that the furniture panelling is able to handle the forces created by the connection.

- Do not screw into the refrigerator cabinet.

The refrigerators are prepared for flush build in.

8. After installation

Read the applicable instructions in chapter *Safety* first.

Cut-in/cut-out voltage

The factory setting for the cut-in/cut-out voltage is 10.4V (cut-out) and 11.7V (cut-in). For trailer applications without on-board battery, this setting can be changed to 11.3V (cut-out) and 12.5V (cut-in).

To change the cut-in/cut-out setting:

- Open the door.
- Unlock the control panel, if applicable, by pressing the fresh food, frozen food or night mode area. Hold it for a few seconds until the control panel blinks twice to be able to adjust the setting.

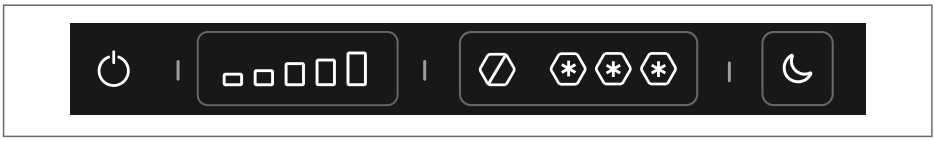

- Open the extra settings mode by pressing the night mode area for 10 seconds. The fresh food lights blink twice.

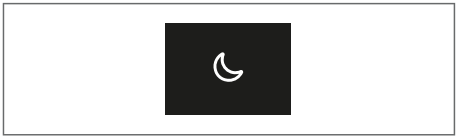

- Press on the fresh food area for 1 second to adjust the setting.

Icons 1 and 5 on: 10.4V (cut-out) and 11.7V (cut-in) (factory setting).

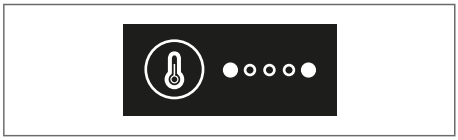

Icons 2, 3 and 4 on: 11.3V (cut-out) and 12.5V (cut-in).

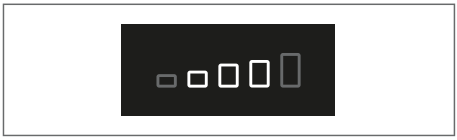

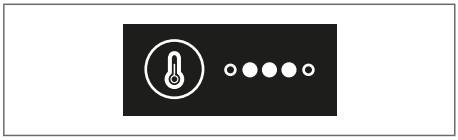

After a few seconds, the control panel will save the settings and go to the locked stand-by mode.

Visual checks

Check if:

- All packaging materials have been removed.
- Sealing has been applied correctly.
- Drain hose is not pinched or blocked, has free access to the outside and the correct angle to drain.
- Ventilation openings are not blocked.
- Electrical cables are not pinched or damaged.
- Electrical cables are not routed close to heat sources (such as hob, oven or heater) and ignition sources.
- Electrical connectors are seated correctly.

Functional checks

Check if:

- Appliance can be switched on/off.
- Refrigerator cools correctly, this means at 25°C ambient temperature the empty cooling cabinet should reach <5 °C in 4 hours.
- Light (if present) in the cooling compartment is working.
- Vegetable bins can be removed from the appliance.
- Door can be closed correctly.

9. Service & questions

Read the applicable instructions in chapter *Safety* first.

Service

Before starting any service work, disconnect the appliance from the electrical supply. After each service the appliance must be checked for electrical safety.

All servicing must be carried out by an approved competent person.

Questions

If you have questions about your product, parts, accessories or authorised services visit *www.thetford.com*.

If you contact an authorised local Service Centre in your country, provide the details of the model and serial number plus the date of purchase.

Warranty

For our warranty clause, please refer to the conditions mentioned on *www.thetford.com*.

Declaration of Conformity

Thetford hereby declares that this product is in compliance with the essential requirements and other relevant provisions of the applicable Regulations, Directives and Standards. A copy of the Declaration of Conformity can be found at *www.thetford.com*.

EUROPEAN HEADQUARTERS
Thetford B.V.
P.O. Box 169
4870 AD Etten-Leur
The Netherlands

T +31 76 504 22 00
F +31 76 504 23 00
E info@thetford.eu

UNITED KINGDOM
Thetford Ltd.
Unit 6
Brookfields Way
Manvers, Rotherham
S63 5DL, England
United Kingdom

T +44 844 997 1960
F +44 844 997 1961
E infogb@thetford.eu

GERMANY
Thetford GmbH
Schallbruch 14
D-42781 Haan
Deutschland

T +49 2129 94250
F +49 2129 942525
E infod@thetford.eu

FRANCE
Thetford S.A.R.L.
Parc BUROPLUS / Bâtiment 6
18, Boulevard de la Paix
CS 80008
95895 Cergy Pontoise Cedex
France

T +33 1 30 37 58 23
F not available
E infof@thetford.eu

ITALY
Thetford Italy c/o Tecma s.r.l.
Via Flaminia
Loc. Castel delle Formiche
05030 Otricoli (TR)
Italia

T +39 0744 709071
F +39 0744 719833
E infoi@thetford.eu

SPAIN AND PORTUGAL
Mercè Grau Solà
Agente para España y Portugal
C/ Castellet, 36 bxs 2a
08800-Vilanova i la Geltrú
Barcelona
España

T +34 938 154 389
F not available
E infosp@thetford.eu

SCANDINAVIA
Thetford Scandinavia
Bangatan 6
521 43 Falköping
Sverige

T +46 31 336 35 80
F not available
E infos@thetford.eu

AUSTRALIA
Thetford Australia Pty. Ltd.
130-132 Freight Drive
Somerton VIC 3062
Australia

T +61 3 9358 0700
F not available
E infoaus@thetford.com.au
www.thetford.com.au

CHINA
Thetford China
Rm. 1207, Coastal Building
(East Block)
Haide 3rd Road, Nanshan District
Shenzen, 518054
China

T +86 755 8627 1393
F +86 755 8627 1673
E info@thetford.cn
www.thetford.cn

www.thetford.com

Copyright 2024 Thetford B.V. All rights reserved.
693097/1124-V01